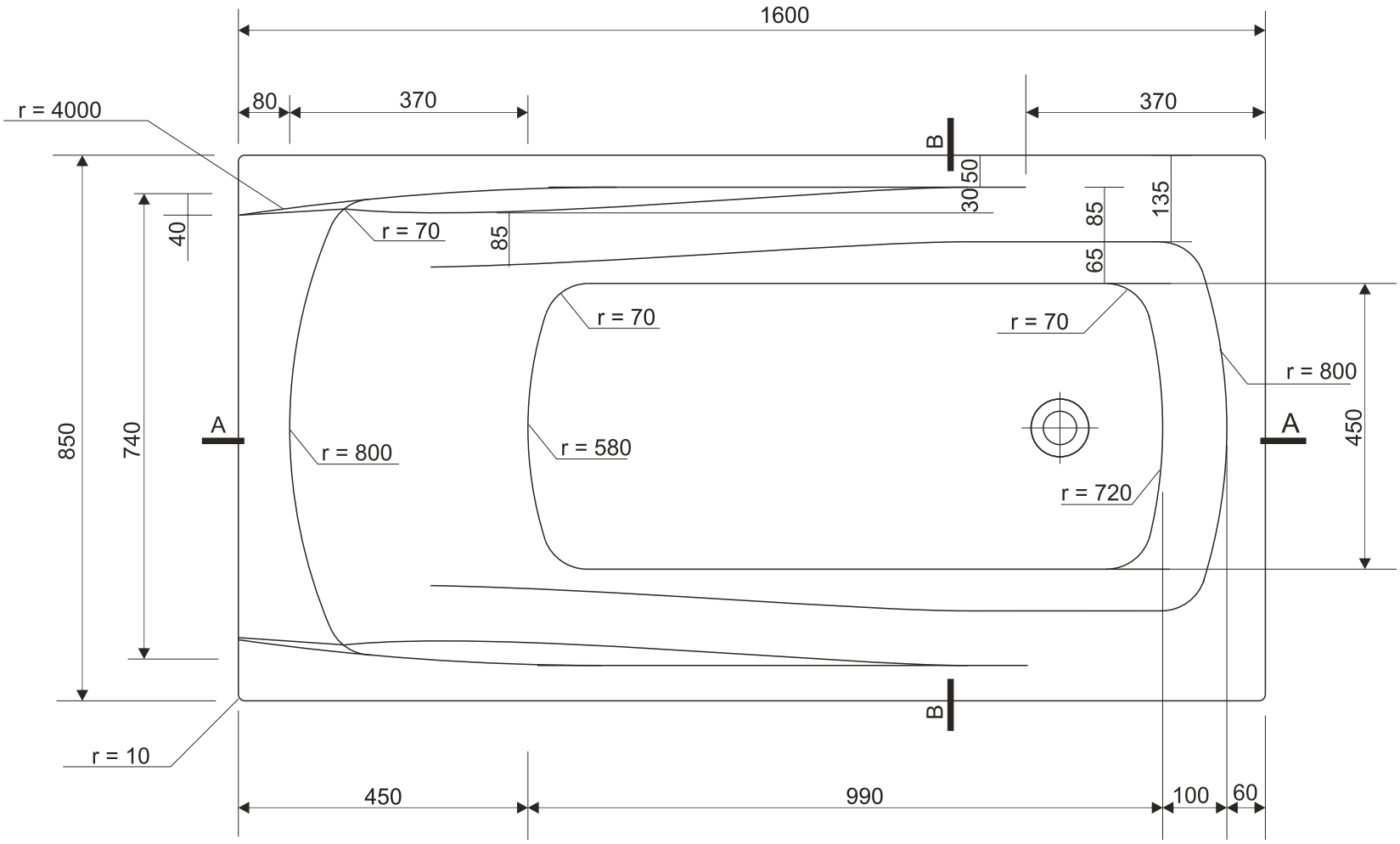
1600
80
370
370
r = 4000
B
50
30
135
85
65
40
r = 70
85
r = 70
r = 70
r = 800
850
740
A
r = 800
r = 580
A
450
r = 720
B
r = 10
450
990
100
60

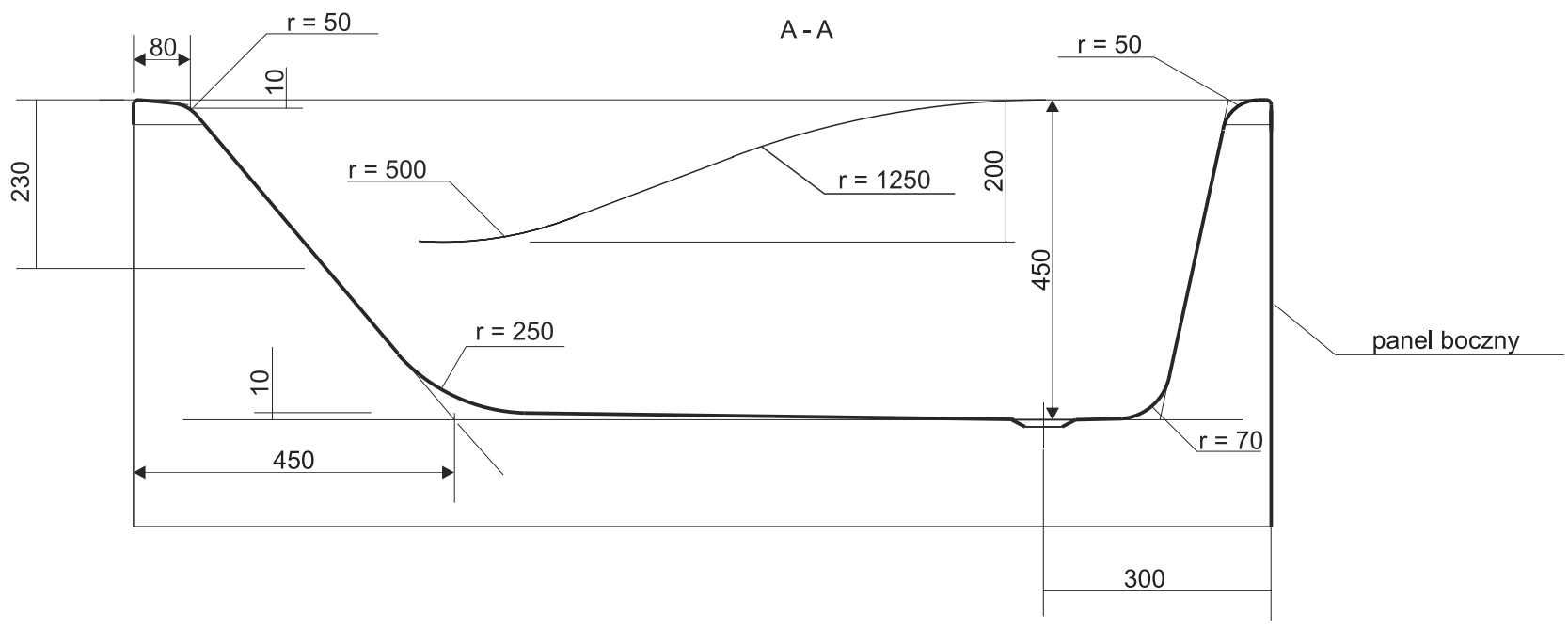
A - A
r = 50
80
10
r = 50
230
r = 500
r = 1250
200
450
r = 250
panel boczny
10
r = 70
450
300